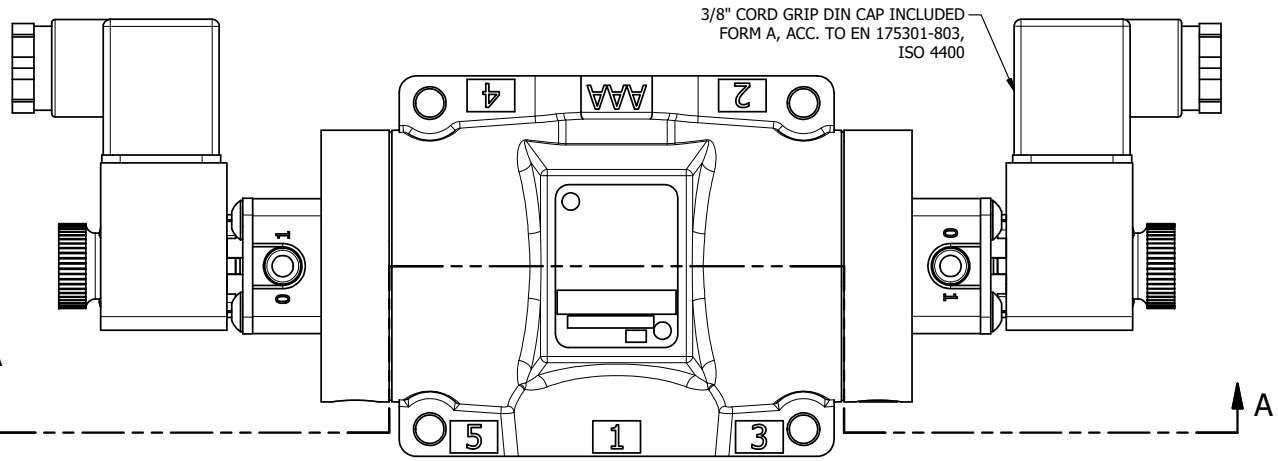

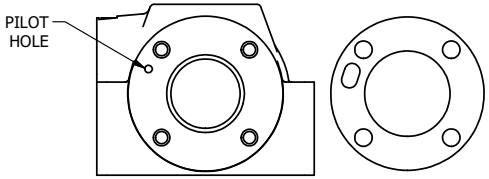

ALIGN PILOT AND HOLE IN GASKET BOTH SIDES FOR EXTERNAL PILOT OPERATION - ROTATE THE ROUND ALUMINUM ADAPTOR 180 DEGREES. REMOVE 1/8" NPTF PLUG AND SUPPLY 50-150 PSI TO 1/8" NPTF PILOT PORT IN ADAPTOR.

NOTES:
1) ALWAYS GIVE VALVE MODEL AND PART NUMBER WHEN ORDERING PARTS.
2) FOR DIFFERENT VOLTAGES OTHER THAN 120/60, REPLACE SOLENOID COIL WITH COIL LISTED IN TABLE BELOW.

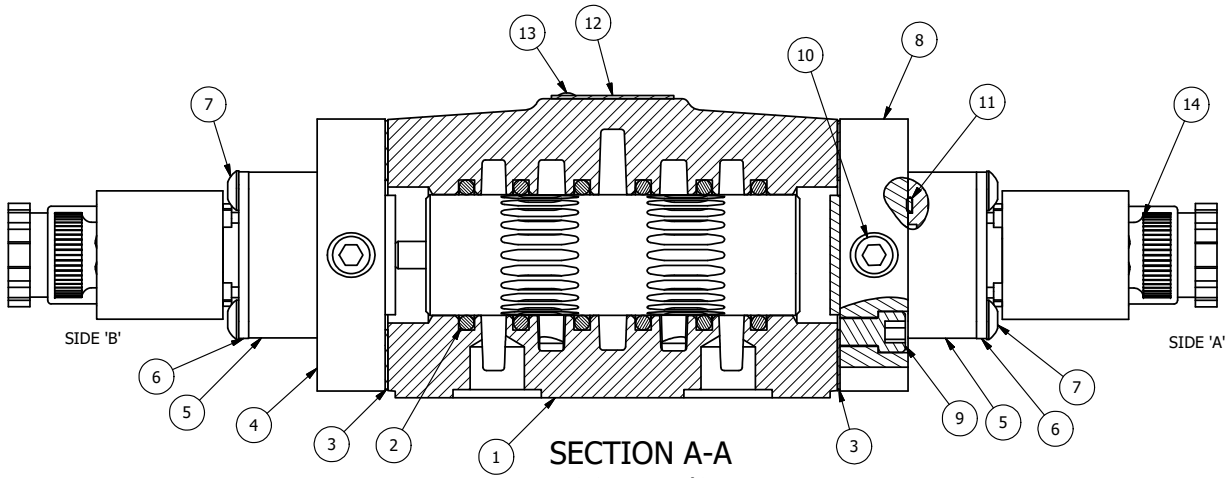

SECTION A-A
SCALE 7/8
VIEW FROM 3 PORT SIDE

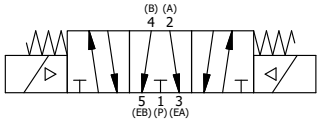

FLG	QTY	PART NO	DESCRIPTION
15	1	SPK-4	KIT - SUBPLATE MOUNT, 1/2" SUBPLATE VALVES
14	2	V-567W	E SERIES SINTERED BRONZE MUFFLER, DUST EXCLUDER, V-613 LOCK WASHER
13	2	V-212	SCREW, #2 X 3/16 DRIVE, TYPE U, OVAL HEAD, STAINLESS STEEL
12	1	AN-114	NAMEPLATE, BLANK, FOR VALVES WITH SPRINGS OR DETENTS
11	2	EMG3	GASKET - END MOUNT SOLENOID, BUNA-N, 1/4" & 3/8" VALVES
10	2	V-19	PLUG, SOCKET PIPE 1/8" NPT (#601-3 PITTSBURG PLUG PART #.)
9	8	V-46	SCREW, 1/4-20 X 3/4, SOCKET HEAD CAP
8	1	SSA48-1E	ADAPTOR, END MNT SOLENOID, 1/2", 3/4" & 1" VALVE
7	8	V-584	SCREW, 10-24 X 1, BUTTON HEAD SOCKET CAP WITH MICROSPHERE APPLIED TO THREADS.
6	2	SEC3-7	PLATE, RE-INFORCEMENT, SOLENOID, STAMPED, 304 STAINLESS
5	2	V-564	SYSTEM 8 INTRINSICALLY SAFE SOLENOID OPERATOR.
4	1	AY-ESY4G	ASSY - SPR CTR, FLOAT CTR SPOOL, END MOUNT SOLENOID, 1/2" VALVES
3	2	ECG48	GASKET - END CAP, 1/2", 3/4" & 1" VALVE
2	6	V-6	O-RING, BUNA-N, 70 DURO, AS-216, (REF 1-1/8 X 1-3/8 X 1/8), 1/2" VALVES, 1" SUBPLATE
1	1	BP4-1	BODY, 1/2" SUBPLATE, UPPER PILOTS, ANODIZED

LIMITS ON DIMENSIONS UNLESS OTHERWISE SPECIFIED	2-PL DECIMAL ± .01 3-PL DECIMAL ± .005 FRACTIONAL ± 1/64 ANGULAR ± 1/2'	AAA PRODUCTS INTERNATIONAL	**AAA PRODUCTS INTERNATIONAL** 7114 Harry Hines Blvd Dallas, TX 75235
DRAWN: RMcKenna	DATE: 5/10/2016	CHECKED: KWaite	DATE: 5/10/2016
SCALE: 1 : 1	SHEET: 1 OF 1	RELEASED: HWomack	DATE: 5/10/2016
TITLE: 1/2" SUBPLATE, DBL SOL, 3 POS, SPR CTR, SOL SHFT, FLOAT CTR SPL, INTRINSICALLY SAFE, 24VDC, EXCLDR		PART NO.: ESY4PGAL 24VDC	REV.:

D:\Engineering\Product\Valve\Assembly\Standard\ESY\DWG\ESY4PGAL 24VDC.dw

THE INFORMATION CONTAINED WITHIN THIS DOCUMENT IS PROPRIETARY TO AAA PRODUCTS AND MAY NOT BE DISCLOSED WITHOUT PRIOR WRITTEN CONSENT